939011265 - 7040H38 CENTRE PILLAR UPPER ELEMENT (ONE), LEFT OR RIGHT - R.R

Removing (Refitting)

Op. 7040L40 FRONT DOOR RUNNING BOARD (ONE), LEFT OR RIGHT - R.R.

Op. 7050A20 ONE-PIECE REAR SEAT CUSHION - R.R.

Op. 7040L44 REAR DOOR RUNNING BOARD (ONE), LEFT OR RIGHT - R.R.

Op. 7040H36 CENTRE PILLAR LOWER ELEMENT (ONE), LEFT OR RIGHT - R.R

- Move the seat into the front end of travel position.

1. Undo the bolt fixing the end of the front seat belt on the seat.

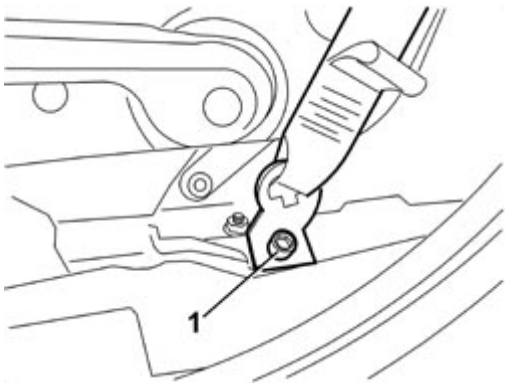

1. Release the door housing seals in the area of the upper pillar cover.
2. Release the bolt covers.
3. Undo the bolts.
4. Keep the upper pillar cover (4a), releasing it from the seat belt (4b).

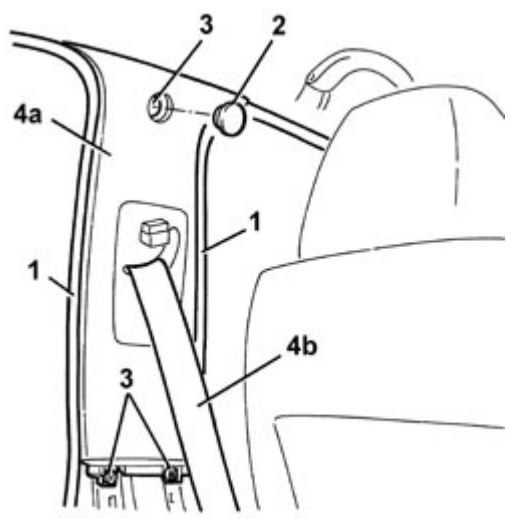

Refitting (Removing)

- Check that the upper pillar cover is not damaged.
- Place the cover and the seat belt in position.
- Tighten the bolts.
- Fit the bolt covers.
- Fit the door housing seals.
- Position the end of the front seat belt on the front seat and tighten the bolt to the recommended torque.

Component	Fastening	dia	Value (daNm)	Validity
FRONT SEAT BELT END	Bolt	M10	3.6 ÷ 4.4	

- Place the seat in the correct position.

Op. 7040H36 CENTRE PILLAR LOWER ELEMENT (ONE), LEFT OR RIGHT - R.R

Op. 7040L44 REAR DOOR RUNNING BOARD (ONE), LEFT OR RIGHT - R.R.

Op. 7050A20 ONE-PIECE REAR SEAT CUSHION - R.R.

Op. 7040L40 FRONT DOOR RUNNING BOARD (ONE), LEFT OR RIGHT - R.R.